Western Electric

212E Vacuum Tube

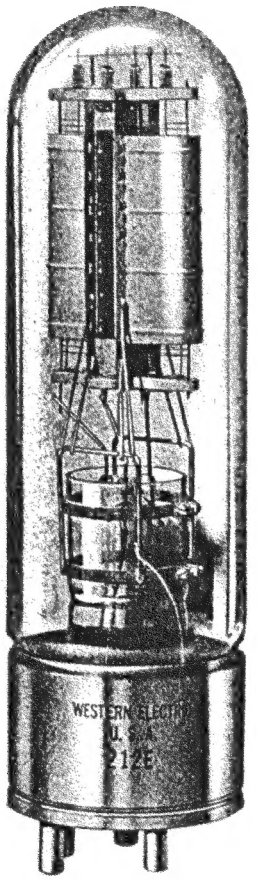

Classification—Filamentary air-cooled triode

May be used as an audio-frequency amplifier or modulator; or as a radio-frequency oscillator or amplifier.

Dimensions—Dimensions and outline diagrams are shown in Figures 1 and 2. The overall dimensions are:

Maximum overall length	13 5/8"
Maximum diameter	3 5/8"

Mounting—Large four-pin bayonet base for use in a W. E. 113A or similar socket, for either vertical or horizontal mounting. If mounted horizontally the plane of the filament, which is indicated in Figure 2, should be vertical.

Copyright 1936 Western Electric Company, Incorporated

Filament—Thoriated tungsten.

Filament voltage	14 volts
Nominal filament current	6 amperes
Average thermionic emission	4 amperes

Average Direct Interelectrode Capacitances

Plate to grid	18.8 $\mu\mu$f
Grid to filament	14.9 $\mu\mu$f
Plate to filament	8.6 $\mu\mu$f

Characteristics—Performance data given below are based upon a typical set of conditions. Variations can be expected with different circuits and tubes.

Figures 3 and 4 give the static characteristics of a typical tube plotted against grid and plate voltages.

Average Characteristics at 2000 volts direct plate potential and minus 90 volts grid bias:

Amplification factor	16
Plate resistance	1900 ohms
Grid to plate transconductance	8500 micromhos

Each 212E vacuum tube falls within one of four impedance classes and is stamped accordingly. These classifications are #1, #2, #3 and #4, and are in no way a gradation of quality, but are to facilitate parallel operation in the ordinary system using a common grid battery. Where more than one tube is used, those of the same or adjacent classes should be employed so that the load may be evenly distributed. When only a single tube is used no one of the classes has any advantage over the other. Tubes may not be ordered according to impedance classification.

With a plate voltage of 1500 volts, a grid bias of −60 volts and a filament voltage of 14, the plate current will be as follows for each impedance class:

#1	110-129	milliamperes, inclusive
#2	130-148	" "
#3	149-167	" "
#4	168-185	" "

Operation

Maximum Ratings

Max. direct plate voltage	3000 volts
Max. direct plate current	350 milliamperes
Max. plate dissipation	275 watts
Max. direct grid current	75 milliamperes
Max. r-f grid current	5 amperes
Max. frequency for the above ratings	1.5 megacycles
Max. plate voltage for upper frequency limit of 4.5 Mc	1000 volts

Max. plate voltage for frequencies between 1.5 and 4.5 Mc in proportion.

The above are maximum ratings which do not apply simultaneously but depend on the type of service as specified below.

Class A Audio Amplifier or Modulator

Direct plate voltage	1500	1250 volts
Grid bias	−57	−40 volts
Direct plate current	170	200 milliamperes
Plate dissipation	250	250 watts
Load impedance	5000	3000 ohms
Undistorted output	50	40 watts

Grid Bias Modulator

Direct plate voltage	3000 volts
Grid bias	−260 volts
Plate dissipation	175 watts
Load impedance	8000 ohms
Peak power output	200 watts

Class B Audio Amplifier or Modulator for balanced 2 tube circuit

Direct plate voltage	2000	1500 volts
Grid bias	−105	−75 volts
Direct plate current per tube		
No drive	40	50 milliamperes
Max. drive	300	300 milliamperes
Plate dissipation	250	250 watts
Load res. plate-to-plate	8000	5900 ohms
Load res. per tube	2000	1475 ohms
Approx. max. output	650	500 watts
Recommended power for driving stage	50	50 watts

Class B Radio-Frequency Amplifier

Direct plate voltage	2000	1500 volts
Direct plate current	300	300 milliamperes
Plate dissipation	275	275 watts
Grid bias	−120	−90 volts
Approx. carrier watts for use with 100% modulation	200	150 watts

Class C Radio-Frequency Oscillator or Power Amplifier—Unmodulated

Direct plate voltage	2000	1500 volts
Direct plate current	300	300 milliamperes
Grid bias	−185 to −250	−150 to −200 volts
Nominal power output	400	300 watts

Class C Radio-Frequency Amplifier—Plate Modulated

Direct plate voltage	1500	1000 volts
Direct plate current	300	300 milliamperes
Grid bias	−200	−125 volts
Max. direct grid current	75	75 milliamperes
Nominal carrier power output for use with 100% modulation	300	200 watts

Operating Precautions

Mechanical—Figures 1 and 2 show the overall dimensions and basing arrangements for the tube.

The tubes should not be subjected to mechanical shock or excessive vibration. Mechanical vibration may cause breakage of the thoriated tungsten filaments.

A free circulation of air must be provided to insure adequate cooling of the glass during operation.

Electrical—Overload protection should always be provided for the plate circuit. A suitable fuse or circuit breaker should remove the plate voltage if the plate current exceeds 350 milliamperes. Although the tube is sufficiently rugged to withstand momentary overloads, a prolonged overload caused by inefficient adjustment of the circuit, may damage the tube. When adjusting a new circuit, reduced plate voltage or a series resistance of 1000 to 5000 ohms in the plate circuit should be used until it is operating properly.

The filament should always be operated at the rated voltage, measured at the tube terminals. A 5% decrease in filament voltage reduces the thermionic emission approximately 25%. Either direct or alternating current may be used for heating the filament. If direct current is used, the plate and grid circuit returns should be connected to the negative filament terminal. If alternating current is used, the circuit returns should be connected to the center tap of the filament heating transformer winding or to the center tap of a resistor placed between the filament terminals. A resistance of 30 to 40 ohms of ten watt rating is suitable.

In cases where severe and prolonged overload has temporarily impaired the electronic emission of the filament, the activity may be restored by operating the filament, with the plate grid voltages off, 30% above normal voltage for 10 minutes followed by a longer period at normal voltage.

Audio Amplifier or Modulator

Class A—Peak grid drive equal to or less than the grid bias.

Grid bias may be obtained from the drop across a resistance in the plate current return or from a battery or rectifier supply.

Plate dissipation allowable for this type of service is generally lower than is safe for other uses since the energy is dissipated in the plate in smaller areas due to relatively high voltage drop in the tube.

The plate dissipation is equal to the plate voltage multiplied by the normal plate current. Performance data are based upon the use of a resistance load. Undistorted output is calculated on the basis of 5% second harmonic distortion.

Class B—Grid bias practically at cut-off and grid driving voltage higher than the bias.

Two tubes may be used in a balanced circuit. An adequate driving stage and an input transformer with good regulation must be used so that the grid current drawn during positive grid swings does not produce appreciable distortion. The output transformer must transform the load impedance to the proper value for the tubes used. The power output obtainable will be determined by the quality of the transformer used and the amount of distortion which can be tolerated. The grid bias must be held constant and therefore cannot be obtained by grid leak or series resistor methods. A battery or other source having good regulation is necessary.

The power required of a modulator for complete modulation of a Class C amplifier is one-half the direct power input to the plates of the Class C amplifier.

Radio-Frequency Oscillator or Power Amplifier

Class B—Radio-Frequency Amplifier

The Class B radio-frequency amplifier is used to amplify a modulated radio-frequency carrier wave without appreciable distortion. It operates similarly to the Class B audio amplifier except that a single tube may be used, the tuned output circuit serving to preserve the wave shape. The push-pull circuit, however, eliminates the even order harmonics and thus increases the efficiency slightly.

Class C—Radio-Frequency Oscillator or Power Amplifier—Grid bias below cut-off.

Unmodulated

This type of operation is suitable for telegraphy, or the production of a continuous flow of radio-frequency power for purposes other than communication.

Plate Modulated

This type of operation is for use when the modulating voltage is superimposed on the plate supply voltage and to obtain good quality the output power should vary as the square of the plate voltage. For complete or 100% modulation, the plate voltage varies from zero to twice the applied direct value during a cycle of the audio frequency. With no modulation applied, the plate voltage is, of course, the direct value and the carrier power output is one-fourth of the peak power output under 100% modulation. In this case, since the plate voltage varies with modulation, the direct value must be rated lower than for other types of operation.

High Frequency Ratings

The frequency limits specified under maximum ratings are based on the tube being used as an oscillator. The tube may be used at full rating up to 1.5 megacycles. When operating at higher frequencies, the dielectric losses, charging currents and lead-in heating are increased greatly. The plate voltage and hence plate dissipation must be reduced to values specified for the upper frequency limit and for frequencies between these two limits the plate voltage should be proportionately reduced.

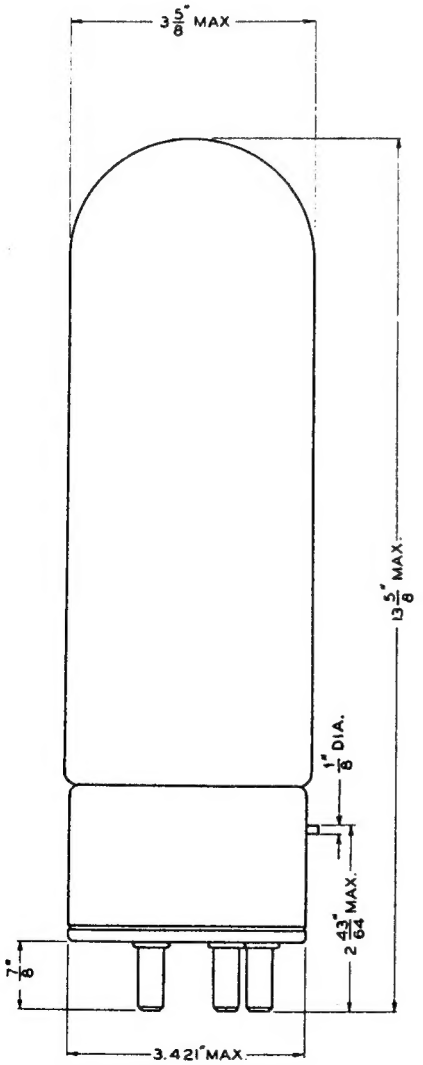

FIG. 1

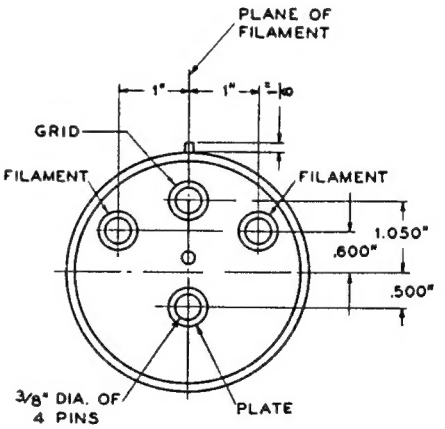

FIG. 2

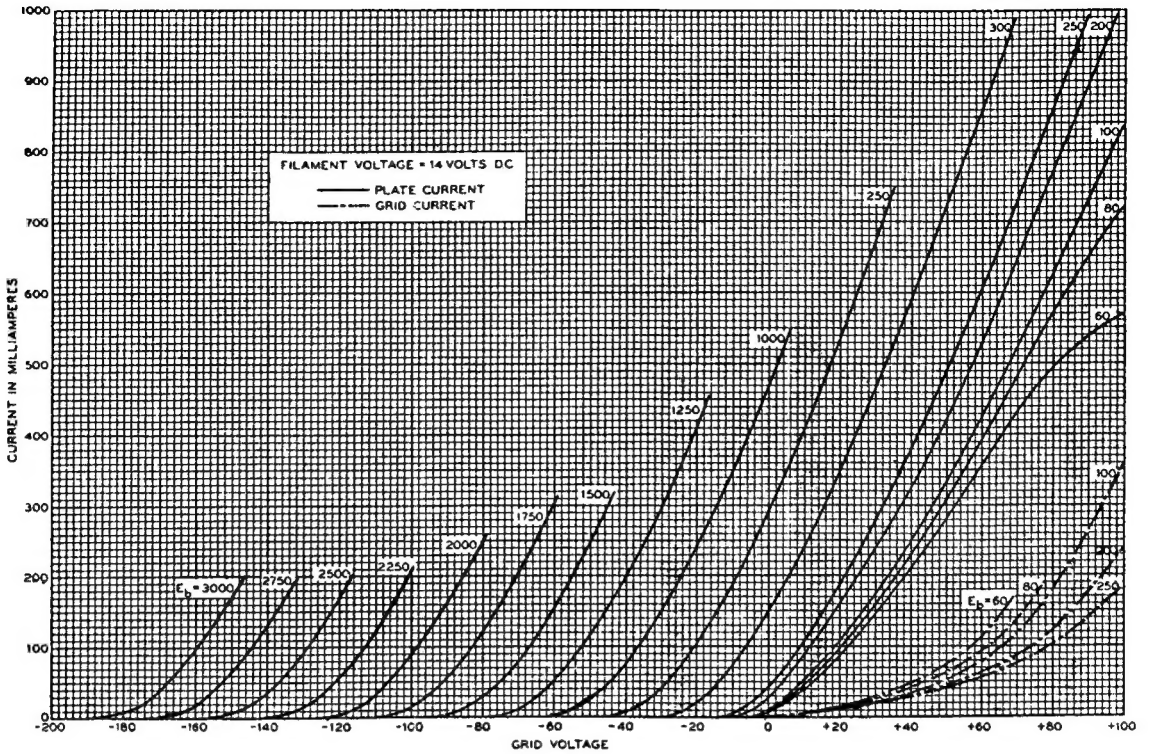

FIG. 3

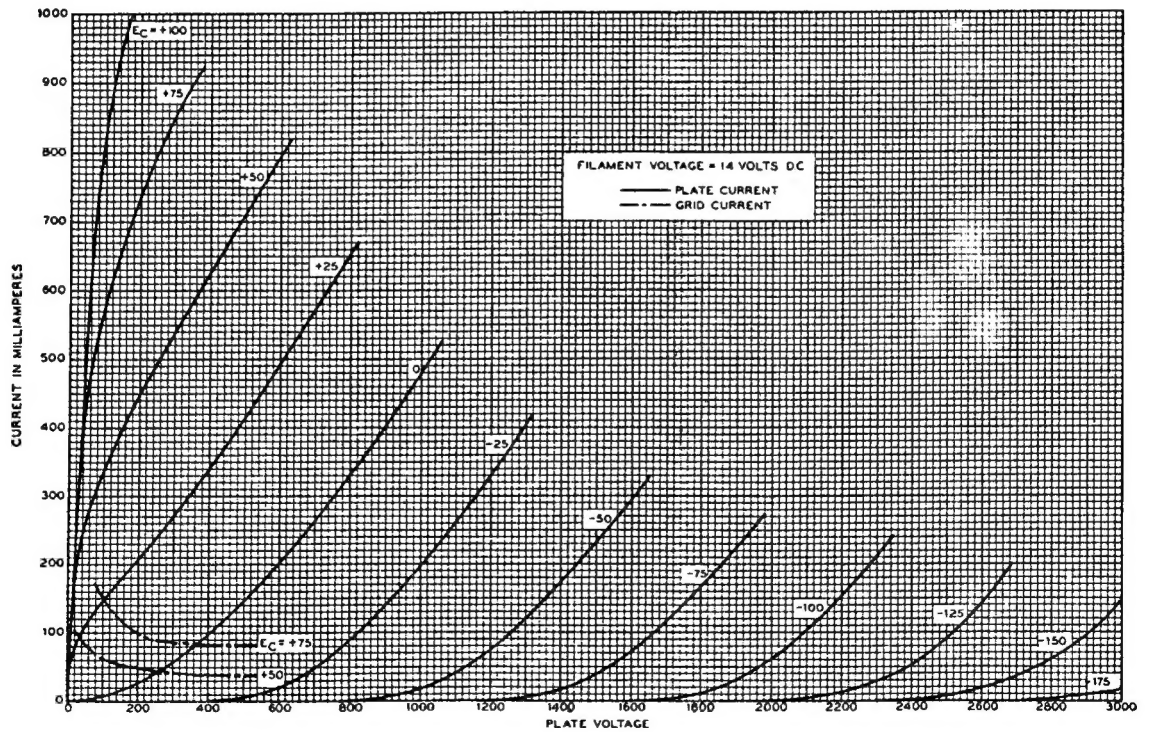

FIG. 4

1-C-36-53C
PRINTED IN U.S.A.

A development of Bell Telephone Laboratories, Incorporated, the research laboratories of the American Telephone and Telegraph Company, and the Western Electric Company

V. T. DATA SHEET 212E
ISSUE 1